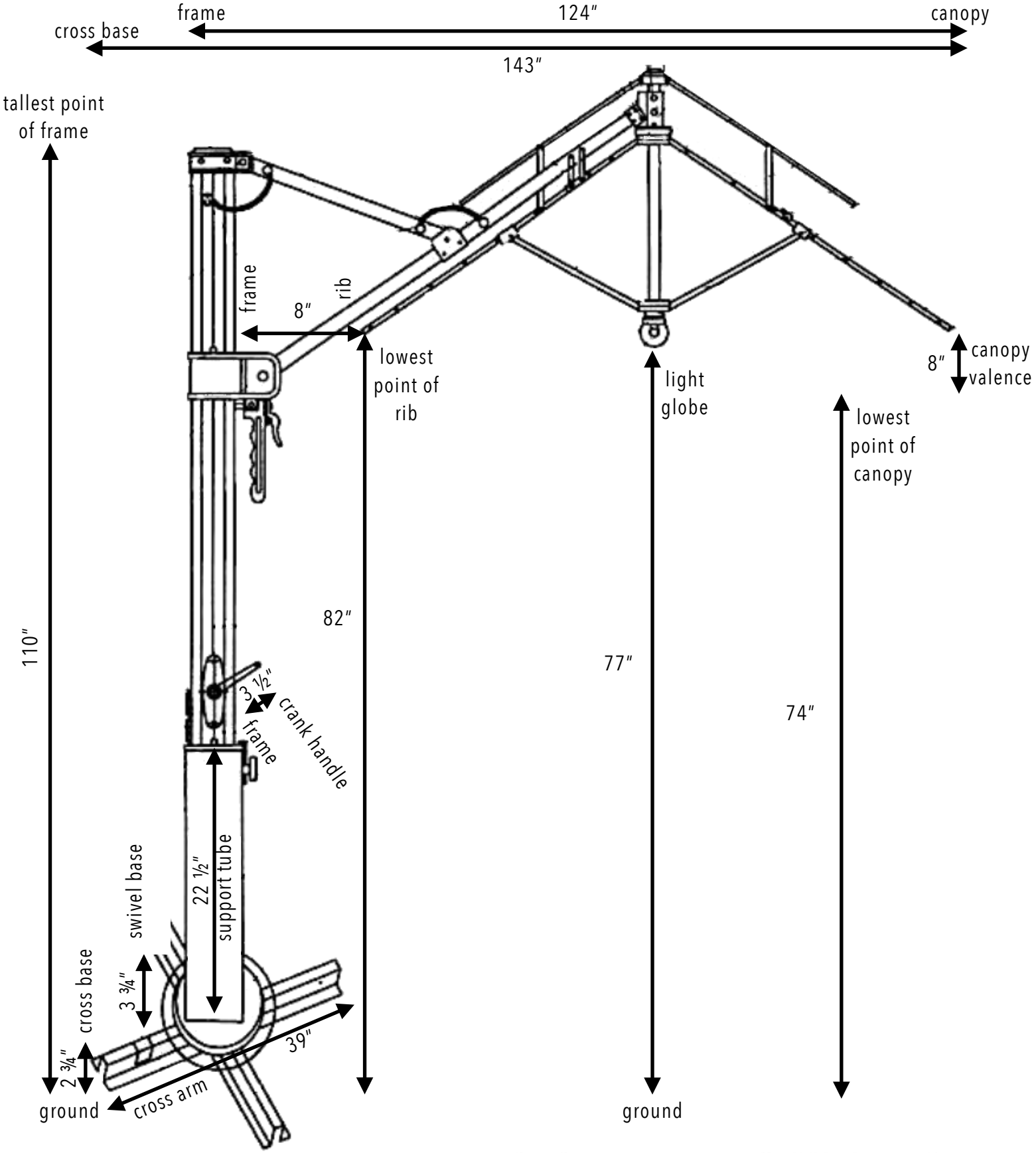
frame
124″
canopy
cross base
143″
tallest point of frame
frame
rib
8″
lowest point of rib
light globe
8″
canopy valence
lowest point of canopy
110″
82″
77″
74″
3 1/2″
crank handle
frame
22 1/2″
support tube
swivel base
3 3/4″
cross base
2 3/4″
39″
cross arm
ground
ground